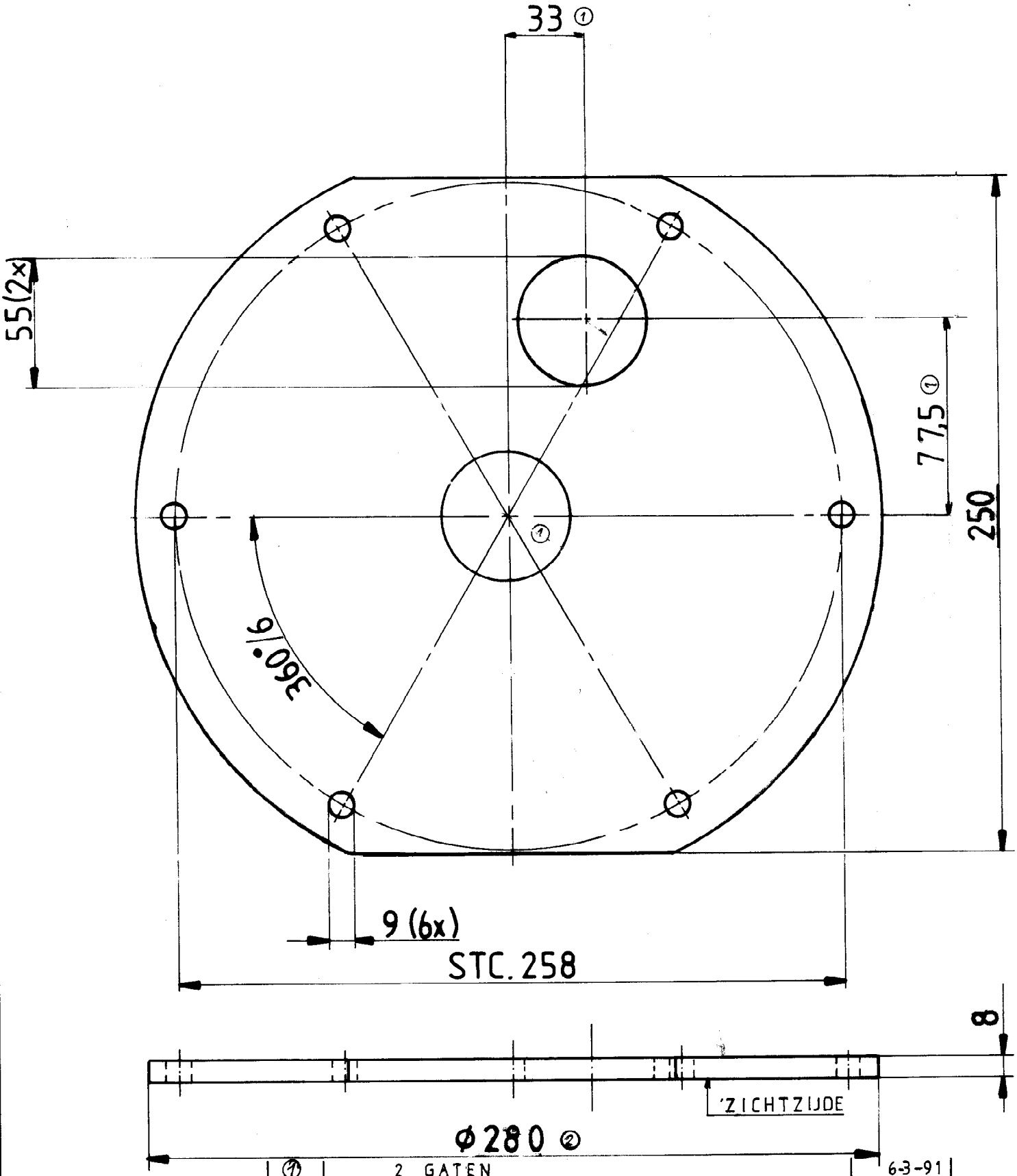

modif	description	date	sign
①	2 GATEN	6-3-91	

material RVS 316	heat treat	parts list

dr J. v.d. Bent
dat 29-04-'86
chk

scale 1:2

hendor POMPEN
phone (04977) - 6810
telex 59120 hedor nl

name ONDERPLAAT

drw no 71-504-000-002 rev
bvo no 500 400 057 rev

②	16-5-91	J L

this information is confidential and is not to be disclosed without written authorization from hendor pompen bv, bladel